frameless direct
architectural glass and hardware

PRODUCT CODE/

GCF-200

PRODUCT TYPE/

Glass D-Clamp Heavy Duty – Square

TECHNICAL DETAILS/

- Glass D-Clamp Heavy Duty Square
- Fits 12mm glass
- To suit 50mm Square Post
- Includes rubber inserts

AVAILABLE FINISHES/

- Polished
- Satin

OPTION 1

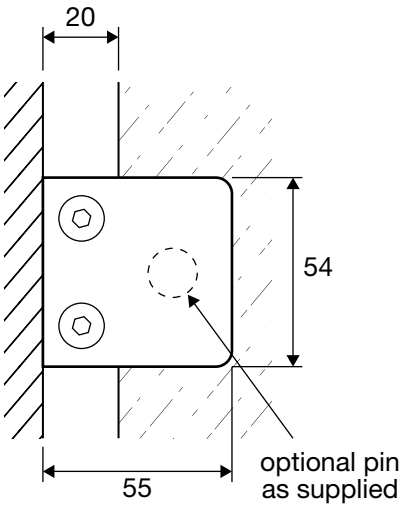

OPTION 2

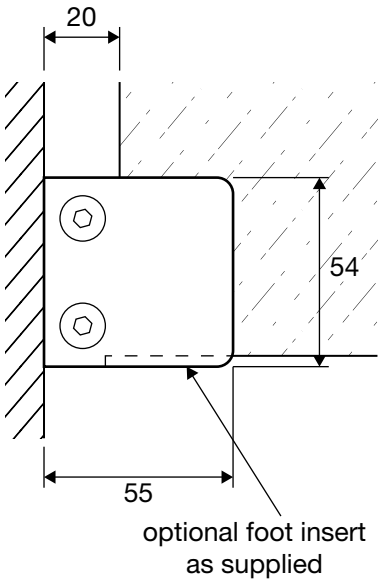

HOLE DETAIL
(for optional pin)

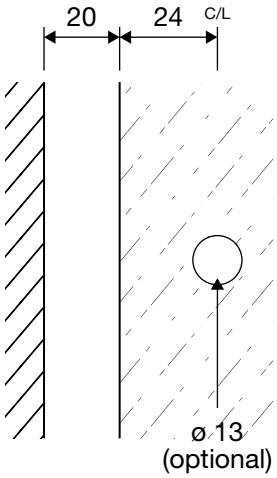

21 Encore Avenue, Somerton, Victoria Australia 3062

info@framelessdirect.com.au
http://www.framelessdirect.com.au

TEL/ 03 9303 9008
FAX/ 03 8339 2425